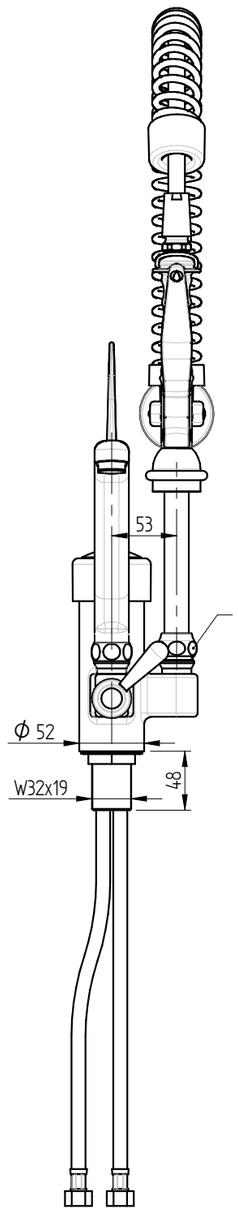

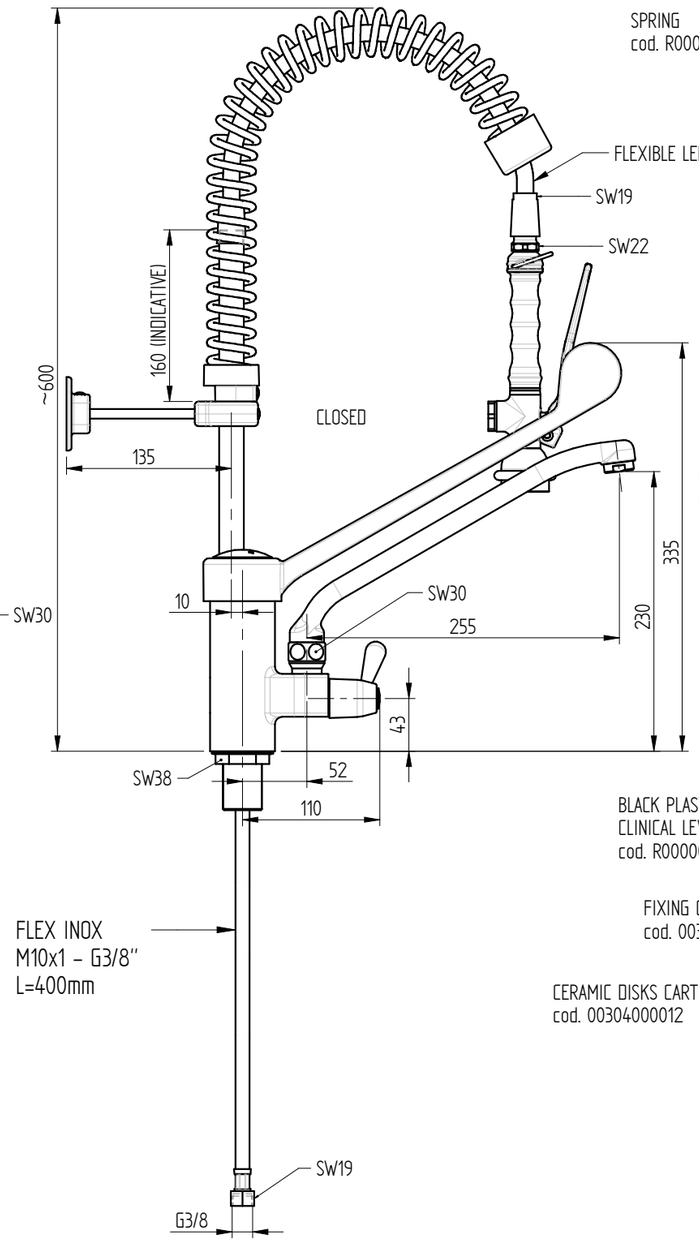

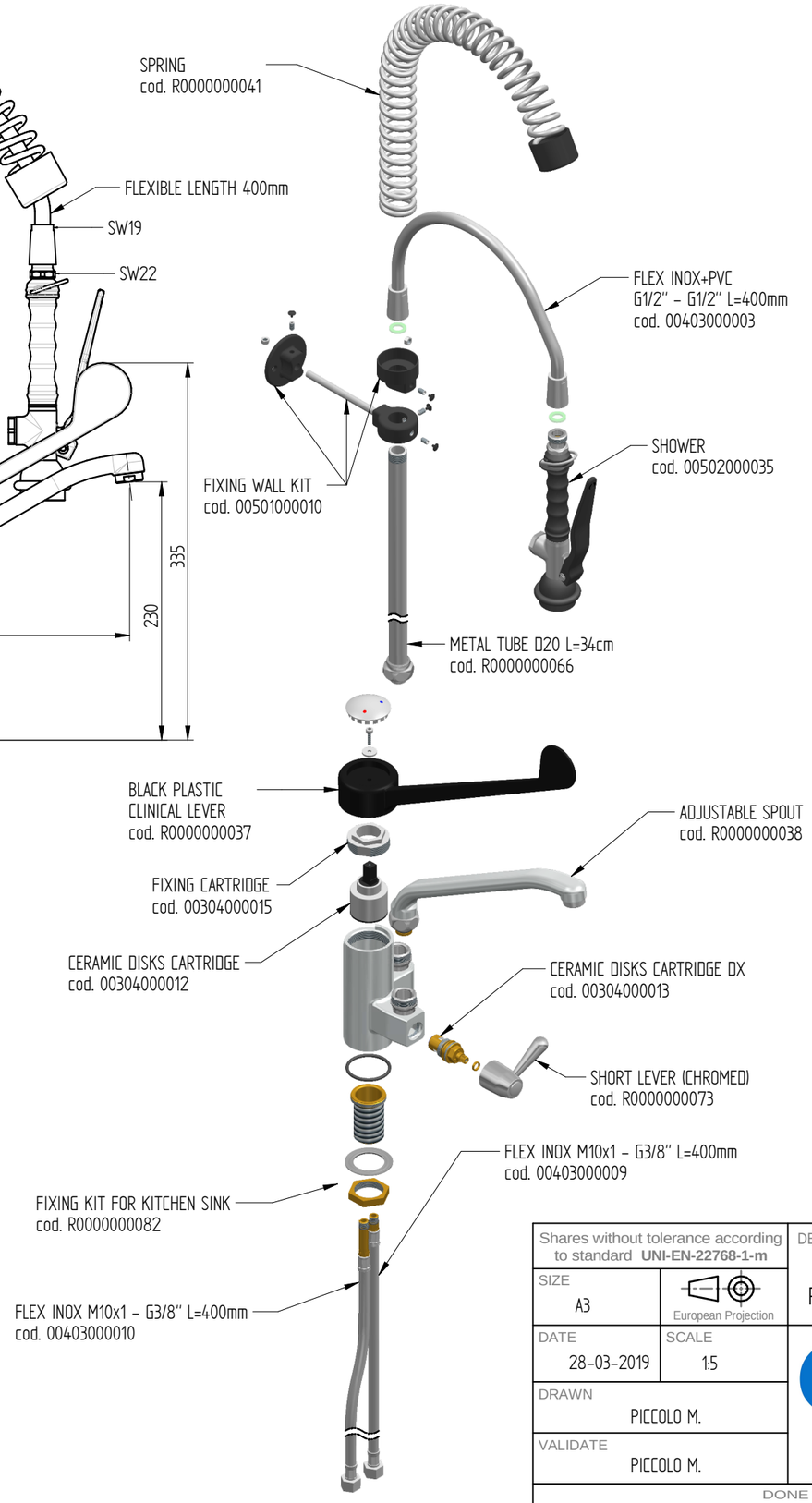

FLOW RATE : 12 L/min at 3,5 BAR only from the shower
14 L/min at 3,5 Bar onlly from the spout
18 L/min at 3,5 BAR when both + spout are open

sink fixing hole : ø32,5 mm

Shares without tolerance according to standard **UNI-EN-22768-1-m**	DESCRIPTION		CODE
	ONE HOLE PRE-RINSE UNIT MIXER WITH SWINGING SPOUT AND PLASTIC (PA6) CLINICAL LEVER, MINI VERSION, BASIC SHOWER HAND		ERAMINI252
SIZE A3	European Projection		WEIGHT 4,56 Kg
DATE 28-03-2019	SCALE 1:5		
DRAWN PICCOLO M.			
VALIDATE PICCOLO M.			

MONOLITH
DESIGN AND TECHNOLOGICAL RESEARCH FOR WATER

VIA DELL'ARTIGIANO 8/F-8-G , 31050 MONASTIER di TREVISO (TV) tel: 0422 842157 - fax: 0422 708978

DONE WITH DESIGN CAD - PROHIBITED THE CHANGES MANUAL

Rev. 01