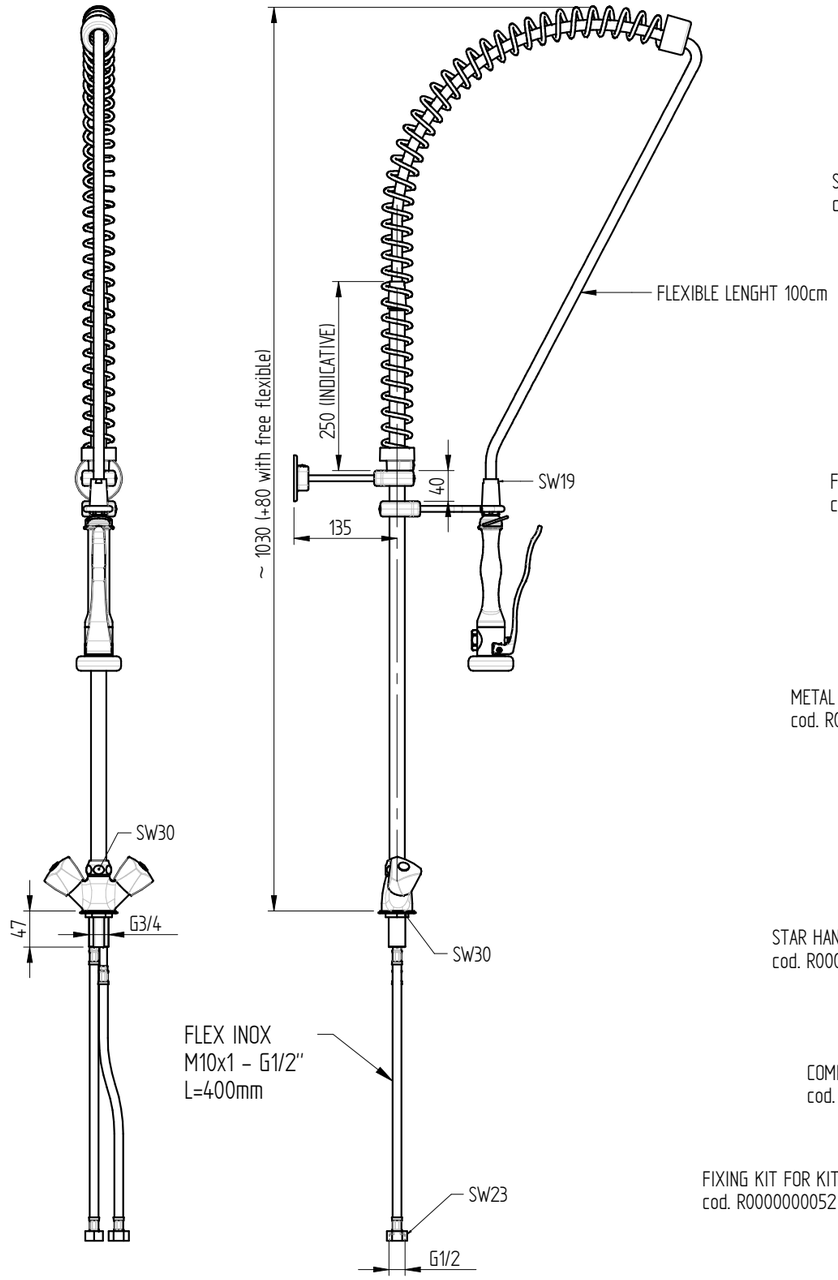

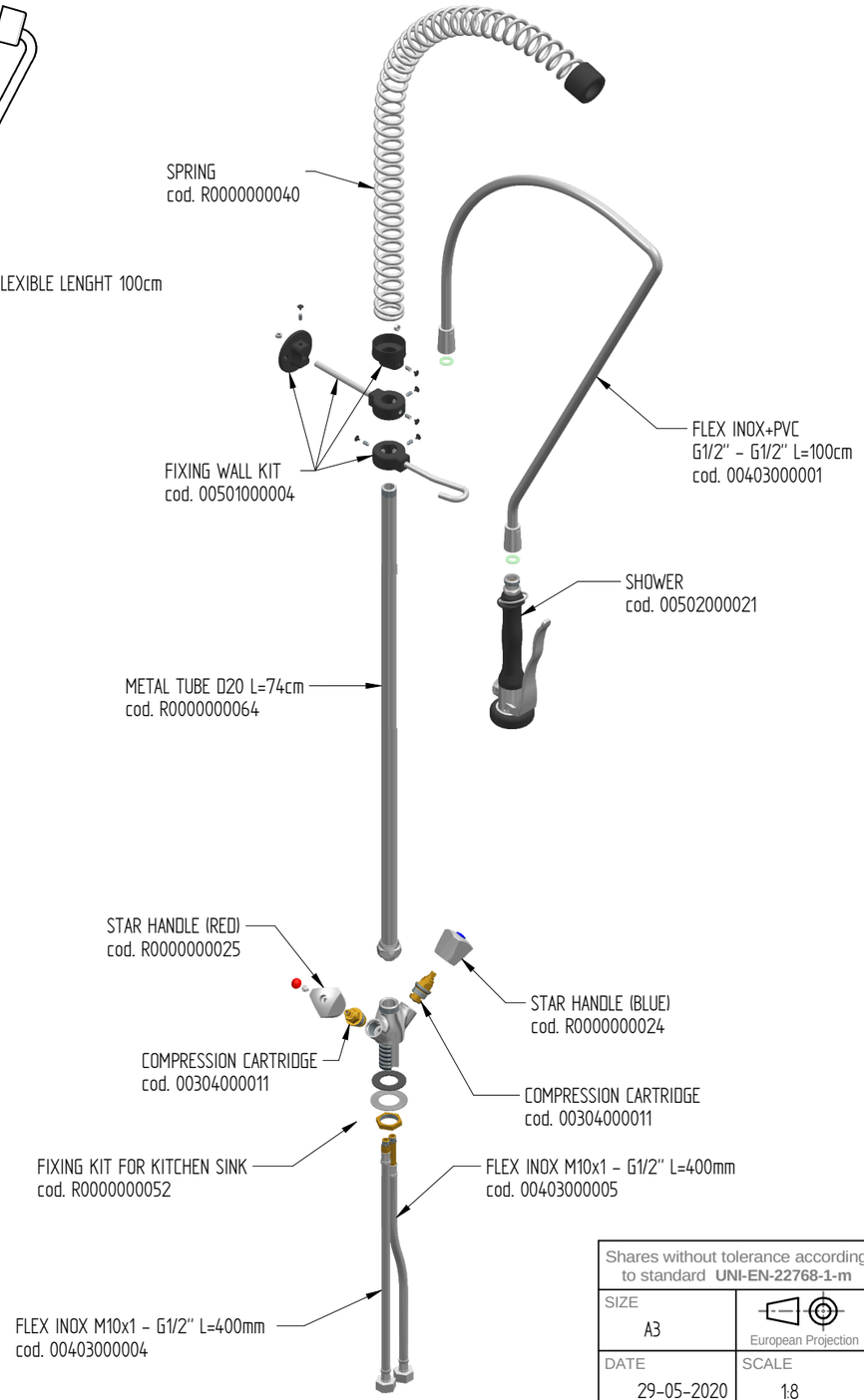

FLOW RATE : 12 L/min at 3,5 BAR only from the shower

sink fixing hole : ø27 mm

Shares without tolerance according to standard **UNI-EN-22768-1-m**	DESCRIPTION ONE HOLE PRE-RINSE UNIT WITH CHROMED STAR HANDLE AND PREMIUM SHOWER HAND	CODE P0101020127
SIZE A3 — European Projection		WEIGHT 4,04 Kg
DATE 29-05-2020 — SCALE 1:8	MONOLITH DESIGN AND TECHNOLOGICAL RESEARCH FOR WATER	
DRAWN PICCOLO M.		
VALIDATE PICCOLO M.	VIA DELL'ARTIGIANO 8/F-8-G , 31050 MONASTIER di TREVISO (TV) tel: 0422 842157 - fax: 0422 708978	

DONE WITH DESIGN CAD - PROHIBITED THE CHANGES MANUAL

Rev. 00