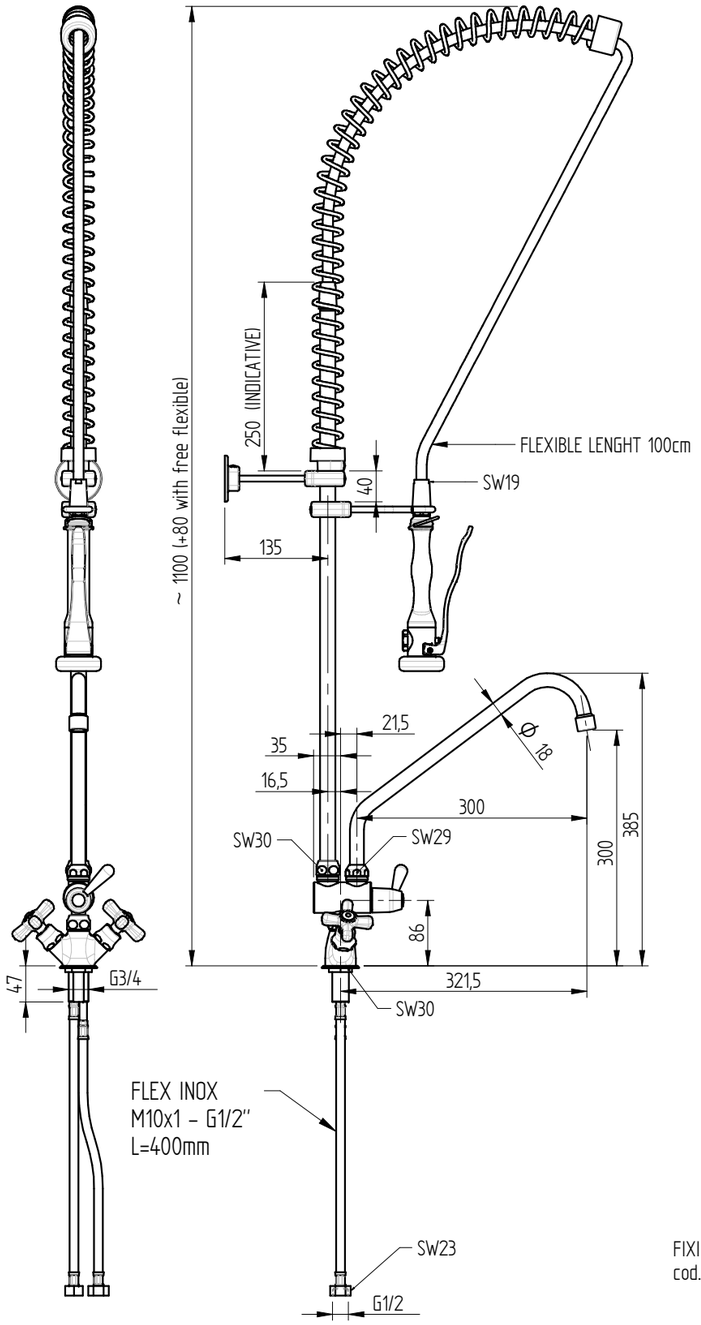

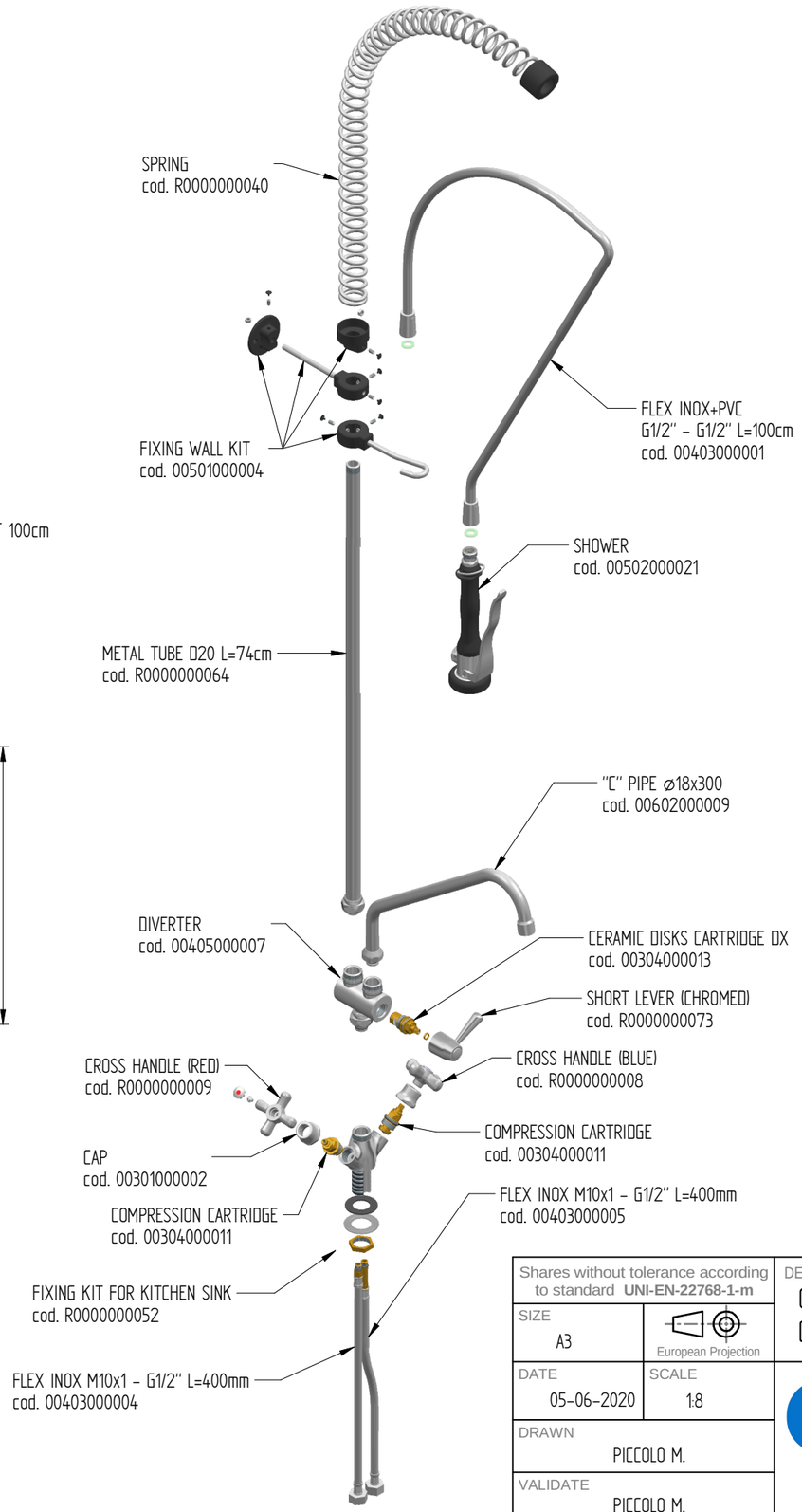

FLOW RATE : 12 L/min at 3,5 BAR only from the shower
14 L/min at 3,5 Bar onlly from the spout
18 L/min at 3,5 BAR when both + spout are open

sink fixing hole : ø27 mm

Shares without tolerance according to standard **UNI-EN-22768-1-m**		DESCRIPTION ONE HOLE PRE-RINSE UNIT WITH "C" SPOUT ⌀ 18x300, CROSS CHROMED HANDLE AND PREMIUM SHOWER HAND	CODE P0101020105
SIZE A3	European Projection		WEIGHT 5,40 Kg
DATE 05-06-2020	SCALE 1:8	MONOLITH DESIGN AND TECHNOLOGICAL RESEARCH FOR WATER	
DRAWN PICCOLO M.			
VALIDATE PICCOLO M.		VIA DELL'ARTIGIANO 8/F-8-G , 31050 MONASTIER di TREVISO (TV) tel: 0422 842157 - fax: 0422 708978	

DONE WITH DESIGN CAD - PROHIBITED THE CHANGES MANUAL

Rev. 00